Q-see®

QTN8552BA3

Product Features

- 5MP(2592×1944) H.265+ full real timecoding
- Max.resolution: 2592×1944;ICR auto switch,true day/ night
- 30~50m IR night view distance
- Motorized zoom lens
- 3D DNR, true WDR, HLC, BLC and ROI coding
- 1CH audio input; 1CH audio output, 1CH speaker
- Hardware reset; Built-in micro SD card slot, up to 128GB
- DC12V/ PoE power supply
- IP67 ingress protection; Support three streams
- P2P function optional
- Support mobile surveillance by smart phones with iOS and Android OS
- Intelligent analytics: abnormal video signal detection (scene change, videotampering), linecrossingdetection(human/vehicle classification), region intrusion detection (human/ vehicle classification), sound and light warning.

RoHS CE FC PoE ONVIF

H.265 P2P HLC BLC PoE IP67 -30°~60°

SPECIFICATION

Camera	
Image Sensor	1 / 2.7 "CMOS
Image Size	2592×1944
Electronic Shutter	1 / 25 s ~ 1 / 100000 s
Iris Type	DC Iris
Min. Illumination	0.008 lux@F1.4,AGC ON; 0 lux with IR 0.0045 lux@F1.2,AGC ON; 0 lux with IR
Lens	Motorized zoom lens; 2.8mm~12mm@F1.4, HFoV:92.7°~29.8°
Lens Amount	Φ14
Wide Dynamic Range	120dB
BLC	Yes
HLC	Yes
Digital NR	3D DNR
Angle Adjustment	Pan: 0°~360°; Tilt:0°~90°; Rotation: 0°~360°

Interfaces	
Network	RJ45
Audio	1CH audio input; 1CH audio output; 1CH built-in speaker
Storage	Built-in micro SD card slot; up to 128GB
Hardware Reset	Yes
Video Output	No
Alarm	1CH alarm input; 1CH alarm output

Intelligent Analytics	
Video Abnormality	Scene change detection,video tampering detection
Perimeter Detection	Regioni ntrusion detection, region entrance detection, region exiting detection and linecrossing detection(human/ vehicle classification),

Image

Video Compression	Smart H.265 / H.265+ / H.265 / Smart H.264 / H.264+ / H.264 / MJPEG
H.264 Compression Standard	Baseline Profile/Main Profile/High Profile
Resolution	5MP(2592×1944), 4MP(2592×1520), 2K(2560×1440), 3MP(2304×1296), 1080P(1920×1080), 720P(1280×720),D1,CIF,480×240
Main Stream	60Hz:5MP/ 4MP/ 2K/ 3MP/ 1080P/ 720P(1~30fps) 50Hz:5MP/ 4MP/ 2K/ 3MP/ 1080P/ 720P（1~25fps）
Sub Stream	60Hz : 720P/D1/CIF (1~30fps); 50HZ: 720P/D1/CIF (1~25fps)
Third Stream	60Hz : D1/CIF/480x240 (1~30fps); 50HZ: D1/CIF/480x240 (1~25fps)C
Bit Rate	256 Kbps ~ 9 Mbps
Bit Rate Type	VBR / CBR
Image Settings	ROI, Saturation, Brightness, Chroma, Contrast,Wide Dynamic, Sharpen, NR,etc. adjustable through client software or web browser
ROI	Each ROI to be configured separately
Audio Compression	G711A/U
High Frame Rate Mode	Mains tream: 1080P/ 720P(1~60fps/ 1~50fps)

Others

Power Supply	DC12V / PoE
Power Consumption	< 11W
Dimensions (mm)	217.7 × 80.5 × 80.5
Operating Environment	-30 °C ~ 60°C(-22°F~140°F） Humidity: less than 95 %(non-condensing)
Weight (net)	Approx. 0.65KG
Installation	Ceiling mounting; Wall mounting

Functions

Remote Monitoring	Web browsing, CMS remote control
Interface Protocol	ONVIF
Storage	Network remote storage; micro SD card storage
PoE	Yes , IEEE802.3af
Online Connection	Support simultaneous monitoring for up to 6 users; Support multi-stream real time transmission
Network Protocol	UDP, IPv4, IPv6, DHCP, NTP, RTSP, PPPoE, DDNS, SMTP, 802.1x, UPnP, HTTPs, HTTP, QoS, FTP, SNMP
Smart Alarm	Motion detection; sensor alarm; SD card error; SD card full; IP address conflict; cable disconnection
General function	Watermark, IP address filtering, video mask, heart beat, illegal login lock
IR Distance	30~50m
Ingress Protection	IP67
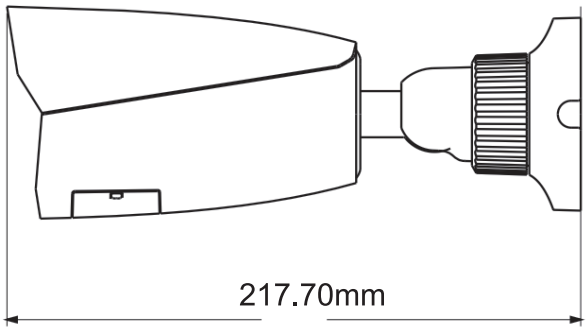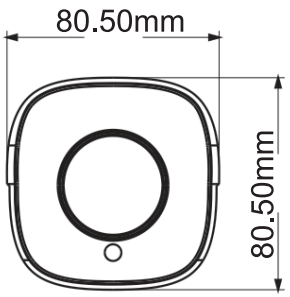
Dimensions